ELLIS

Holding Power

BLACK BOOK

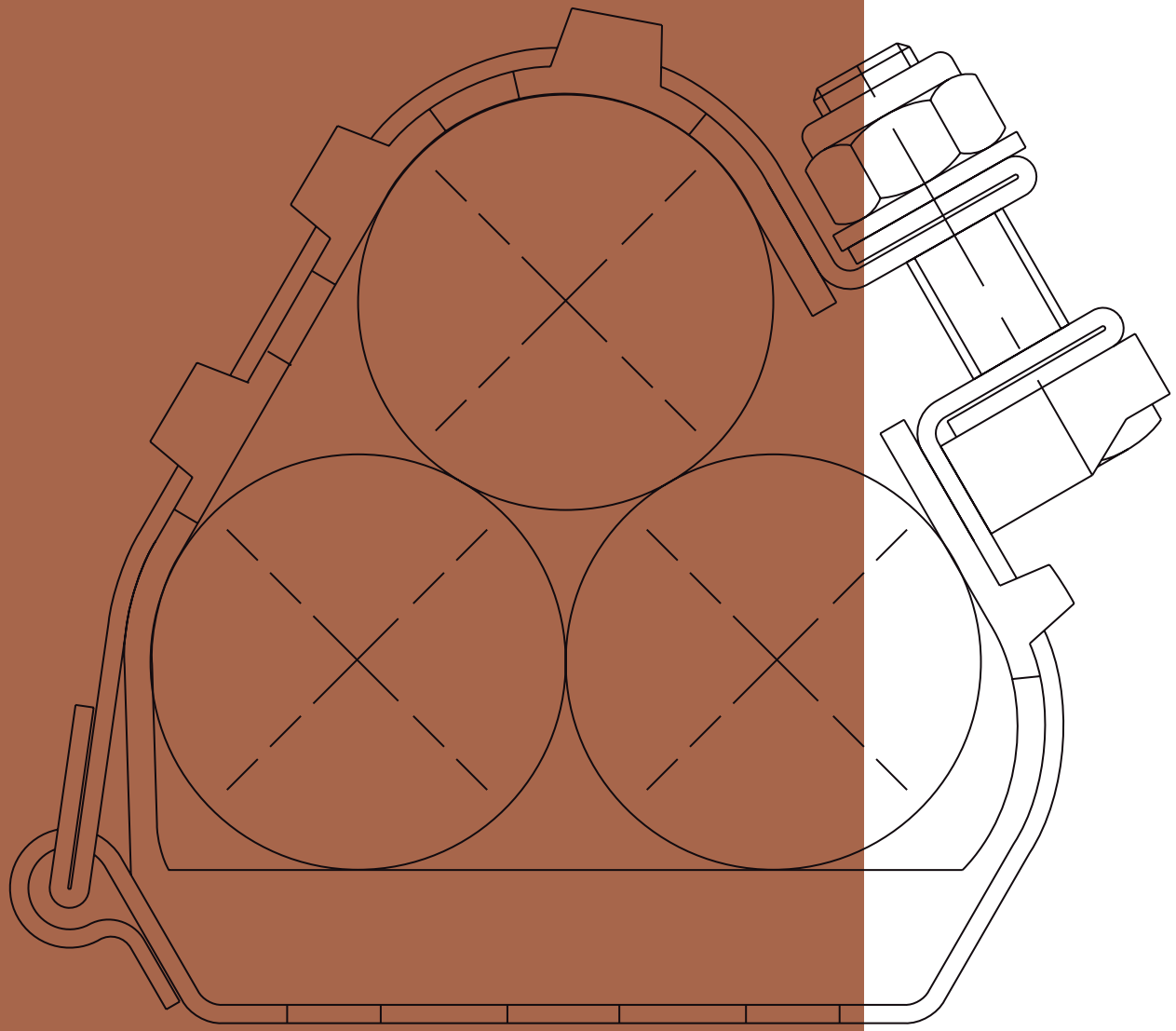

THE ELLIS GUIDE TO CABLE CLEATS

What are cable cleats and why are they necessary? 4

The international standard 6

The mechanical strength of cable cleats 7

Short-circuit testing 8

Calculation of cleat spacing and selection of cleat type 12

Technical Specifications for Cable Cleats 16

Matters of corrosion 20

FREQUENTLY ASKED QUESTIONS

- Operating Temperatures 28
- Eddy Currents 28
- Multi-Core Cables 28
- Fire 29
- UV resistance 30
- Cable system design 31
- Type approvals 33
- Business management 34
- 61914 Standard 35

References 43

Technical Specifiers Guide & Checklist For Cable Cleats 44

WHAT ARE CABLE CLEATS AND WHY ARE THEY NECESSARY?

"A CABLE CLEAT IS A DEVICE DESIGNED TO PROVIDE SECURING OF CABLES WHEN INSTALLED AT INTERVALS ALONG THE LENGTH OF THE CABLES"

IEC 61914 Cable Cleats for Electrical Installations

"Every conductor or cable shall have adequate strength, and be so installed as to withstand the electromagnetic forces that may be caused by any current, including fault current."

IET Wiring Regulations BS7671

"Cable restraints should:

- Prevent excessive cable movement due to fault-current magnetic forces
- Be rated for specific cable size and available current"

The fifth edition of API Recommended Practice 14F (Design, Installation and Maintenance of Electrical Systems for Fixed and Floating Offshore Petroleum Facilities)

"Single core electric cables are to be firmly fixed, using supports of strength adequate to withstand forces corresponding to the values of the peak prospective short-circuit current."

Lloyds Register. Rules and Regulations for the Classification of Ships, Part 6, Control, Electrical, Refrigeration and Fire

"Cables are to be installed and supported in ways to avoid chafing and undue stress in the cable."

ABS Steel Vessel Rules 4-8-4/21.9 Cable Support, 4-8-4/21.9.1 General and 4-8-4/21.9.3 Clips, Saddles, Straps

"In order to guard against the effects of electro dynamic forces developing on the occurrence of a short-circuit or earth fault, single core cables shall be firmly fixed, using supports of strength adequate to withstand the dynamic forces corresponding to the prospective fault current at that point of the installation."

DNV Rules for Ships / High Speed Light Craft and Naval Surface Craft, Pt. 4 Ch. 8 Sec.10 – page 68, C50

ALWAYS REMEMBER:

Any power cable system designer or installer has an obligation to consider the method of securing cables in order to restrain their movement whether caused by an electrical fault or any other reason.

Other regulations outlining the whats and whys of cable cleats include NFPA-70 (US National Electrical Code) and C22.1 (Canadian Electrical Code).

THE INTERNATIONAL STANDARD

IEC 61914 Cable cleats for electrical installations outlines a series of tests that can be used to assess the performance of a cleat's design.

Although the standard does not define pass or fail levels, it allows manufacturers to define the performance characteristics of their products, and specifiers to compare products from different manufacturers.

The aspects of construction and performance covered by the standard include:

- Material type – i.e. metallic, non-metallic or composite
- Minimum and maximum declared service temperatures
- Resistance to impact at the minimum declared operating temperature
- The ability of the cleat to withstand axial slippage forces
- Resistance to electro-mechanical forces – i.e. the ability of the cleat to withstand the forces between the cables in the event of a short-circuit
- Resistance to UV and corrosion
- Flame propagation

NOTE:

See FAQ's section page 28 for further details.

THE MECHANICAL STRENGTH OF CABLE CLEATS

The international standard IEC 61914 includes a formula in Annex B that enables a designer to calculate the force between two conductors during a fault.

If the strength of a particular cleat is also known, then the optimum spacing of the cleat along the cable in order to restrain the force created by the fault can be calculated.

The strength of a cable cleat is often determined using a mechanical tensile test. However, the results may be misleading because the force is applied in a slow and controlled manner, which does not replicate fault conditions.

In a short-circuit fault the forces are applied almost instantaneously and oscillate in every direction. Experience shows that a cleat that survives a mechanical tensile test at a given force will not necessarily survive a short-circuit test, even if forces are the same.

Consider the properties of glass, immensely strong under tension but subject to brittle failure when impacted.

SHORT-CIRCUIT TESTING

Conducting a short-circuit test is the only reliable way of proving that a cable cleat is capable of withstanding a specific set of fault conditions.

We always recommend that any claims of cleat strength should be supported by a short-circuit test carried out in an independent and accredited laboratory and appropriately certified..

Specifiers, consultants and engineers should also request, as standard, a complete test report that includes before and after photographs, and a table of results and conclusions.

This practice is becoming commonplace, but prior to the publication of the international standard IEC 61914 many cable cleats were not tested, and those that were had no standardised testing method by which to gauge success or failure. As a result, test results were open to a wide range of differing interpretations.

IEC 61914 has provided a standardised method for conducting a short-circuit test and defines the criteria for determining a pass. However, it permits a significant degree of latitude, necessitating caution when interpreting results. It is advisable to review the entire report rather than solely relying on the headline page.

EXAMPLE: COMPARING TEST RESULTS

Two manufacturers have tested cleats to the international standard IEC 61914 and both claim their cleat is capable of withstanding a peak short-circuit current of 140kA.

- Manufacturer 'A' conducted a test using a 35mm cable cleated at 600mm centres
- Manufacturer 'B' conducted a test using a 45mm cable cleated at 300mm centres
- Your system peak fault level is 60kA, you are using a 30mm diameter cable and you wish to cleat at 1200mm centres.

Are both cleats suitable?

The answer? **No.**

Using the formula from The international standard IEC 61914 (provided and explained in the following section) the force each cleat was subjected to was:

Manufacturer 'A'	57kN
Manufacturer 'B'	22kN
You require	24kN (min)

Manufacturer B's product does not meet the requirement.

This example reinforces the importance of protecting a specification throughout the procurement process. An engineer can diligently calculate the forces and optimise the whole job cost through careful choice of cleat and cleat spacing. Yet when the project reaches the buyers they may see a requirement for 20,000 cleats, which they view as commodity products and so specify and install a cheaper option. The risks of under specification, given the dangers involved, are obvious.

ALWAYS REMEMBER:

Ellis will always specify a cleat capable of meeting the requirement.

SHORT-CIRCUIT TESTING

TEST DURATION

There is a major difference between the short-circuit withstand requirements of a cable and the short-circuit withstand of a cable cleat.

The former is concerned with cable degradation as a result of temperature rise (thermal stress heating), while the latter is concerned with cable retention as a result of electromechanical forces.

Typical installation specifications that have been derived from the thermal withstand of the cable would require a short-circuit withstand of 63kA for 1 second or 40kA for 3 seconds.

A short-circuit test for a cable cleat does not consider this heating effect, and instead concentrates entirely on the destructive electro-mechanical forces at peak, followed by a short term decaying RMS.

The international standard IEC 61914 requires a short-circuit test duration of just 0.1 second. This equates to five complete cycles, by which time the true strength of a cable cleat will be known.

DYNAMIC VS THERMAL

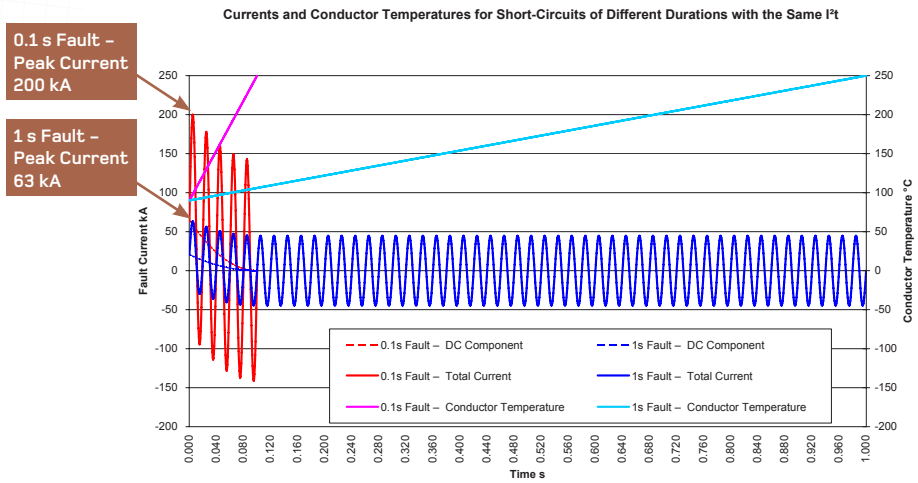

The conductor temperature will continue to rise until the fault condition ends. At this point the conductor temperature will begin to fall as heat dissipates through the rest of the cable structure. The thermal withstand of a cable is its ability to withstand this process.

Maximum cleat stress and the most likely point of cleat failure occurs at Peak Current (where indicated) after about 0.01s of commencement of the fault.

CALCULATION OF CLEAT SPACING AND SELECTION OF CLEAT TYPE

Where the system peak fault current and the cable diameter are known, the following formula, taken from The international standard IEC 61914, can be used to calculate the forces between two conductors in the event of a three phase fault:

$$F_t = \frac{0.17 \times i_p^2}{S}$$

Where:

F_t = force in Newton/metre (N/m)

i_p = peak short-circuit current in kiloamp (kA)

S = distance between the centrelines of the conductors in metres (m)

Once F_t in N/m has been determined then the force for each potential cleat can be calculated.

Metric ladder typically has rungs at 300mm intervals, so cleat spacing is usually a multiple of this distance. So, F_t x 0.3 gives the force a cleat will see if spaced at 300mm, F_t x 0.6 for 600mm etc.

F_t x cleat spacing can then be compared to the cable cleat resistance to electromechanical force and then the cleat type and spacing can be selected.

$$F_t = \frac{0.17 \times i_p^2}{S}$$

CABLE CLEAT RESISTANCE TO ELECTROMECHANICAL FORCE

CLEAT SPACING / CLEAT TYPE: TREFOIL FORMATION	300mm		600mm and above	
	Strength (N)	SC Level (kA)	Strength (N)	SC Level (kA)
Alpha	9,526	82	15,265	73.4
Trident LSF	20,741	121	20,741	121
Trident GFN	25,438	134	25,249	94.4
Vulcan+, SD Flexi-strap	25,438	134	37,471	115
Colossus, HD Flexi-strap	42,111	170	63,750	150
Emperor, HD Flexi-strap	51,034	195	62,903	149
CLEAT TYPE: SINGLE FORMATION				
Phoenix	2,466	31.1	2,466	31.1
Vulcan+	7,436	135	16,454	142
2F+	-	-	6,561	80.2
Solus LSF	10,057	157	10,057	157
Solus GFN	10,974	164	10,974	164
Emperor+	15,198	193	18,360	150
2A	17,079	183	17,079	183

ALWAYS REMEMBER:

Whole job cost should always be considered as costs can often be reduced by using a stronger, more expensive cleat at a wider spacing than a cheaper option at more regular intervals.

The values in the above table are derived from actual short circuit tests carried out by Ellis. Test report numbers are detailed on individual product data sheets and test reports are available upon request. At 300mm spacing significantly more force is transmitted to the cleat by the cable compared to 600mm spacing and above.

Knowing the maximum peak short circuit current as specified by the system designer allows the appropriate cleat and spacing to be selected. The short circuit calculation formula uses peak current, however this is often unavailable with a Root Mean Square (RMS) value given instead. The ratio of peak to RMS short circuit fault current is dependent on the electrical characteristics of an installation, and typically specified by the system design Electrical Engineer As standard Ellis recommends the conversion factor used is 2.5, this is taken from IEC62271: High Voltage Switchgear. Dependant on the system a lower value can be used, IEC 61439-1: Low Voltage Switchgear and Control Gear Assemblies is commonly referred to, which uses the multiples in the table below. It is acceptable to use a value other than 2.5 with input from the system Engineer.

RMS value of SC current (kA)	Multiple
$10 < I \leq 20$	2
$20 < I \leq 50$	2.1
$50 < I$	2.2

Before a cleat and spacing are finalised, two other factors should be considered irrespective of the short-circuit level.

1) It is strongly recommended that a system employs a fault rated cleat or restraint at a maximum spacing of 1500mm.

2) On bends and risers it is recommended that the maximum cleat spacing is 300mm.

TECHNICAL SPECIFICATION FOR CABLE CLEATS

Every conductor or cable shall have adequate strength and be so installed as to withstand the electromagnetic forces that may be caused by any current, including fault current, (IET Wiring Regulations 18th Edition BS7671:2018 (2018)).

Cable cleats shall be used to secure cabling to whatever containment system is used as well as direct securing to structure if no containment is necessary. All cable cleats shall comply with IEC 61914:2021.

NOTE:
See page 44 for a detailed Technical Specifiers Checklist for Cable Cleats

Cleats shall be selected based on:

- Calculated level of short circuit fault current.
- The type of cable and cable arrangement.
- The space available for installation and on to what structure /material the cleat is being secured.
- Environment in which they are to be used

The following documentation shall be provided by the manufacturer on request:

- Data sheets for the recommended cable cleats and intermediate restraints
- Installation guides for the recommended cable cleats and intermediate restraints.
- A copy of the relevant independent third-party short circuit test certificate.
- The manufacturer's short circuit mechanical force calculations.
- Technical drawings of the cable cleats and intermediate restraints.
- Technical construction file detailing compliance and justifying CE compliance.

1. Material:

The cable cleat shall be made of high-quality stainless steel (316L or equivalent) to ensure maximum strength, durability, and corrosion resistance in harsh environments.

2. Design:

The cable cleat shall be designed to provide maximum cable support and retention, and be suitable for use in vertical, horizontal, and inclined cable runs. The cleat shall be able to withstand the forces generated by short circuit conditions without allowing the cable to escape or sustain damage.

3. Size and Capacity:

The cable cleat shall be available in various sizes to accommodate cables with diameters.

4. Certification:

The cable cleat shall be designed and tested to comply with international standard IEC 61914:2021 and be independently short circuit tested by a recognized third-party test facility.

5. Installation:

The cable cleat shall be easy to install and require no special tools or equipment. The cleat shall be supplied with all necessary closure fixing hardware, including nuts, bolts, and washers, and be suitable for use on all types of cable tray, ladder, and conduit systems.

6. Warranty:

The cable cleat shall be warranted against defects in material and workmanship for a period of at least 12 months from the date of purchase. The warranty shall cover repair or replacement of the cleat, at the manufacturer's discretion, and exclude damage caused by misuse, negligence, or unauthorized modifications.

7. Spacing of Cleats:

Cleats must be spaced so to provide a continuous strength of resistance to the electromechanical forces generated during fault conditions. The spacing required can be derived from a combination of the force calculation and the given certified strength of the cleat. Manufacturers will generally provide a spacing based on a level of fault current i.e. 300mm spacing at 165kA.

CALCULATION OF CLEAT SPACING AND SELECTION OF CLEAT TYPE

EXAMPLE 1

Peak fault: 160kA

Installation: Ladder

Cables in trefoil with an outside diameter of 38mm

$$F_t = \frac{0.17 \times 160^2}{0.038} = 114{,}526 \text{N/m}$$

F_t x CLEAT SPACING	REQUIRED RESISTANCE TO ELECTROMECHANICAL FORCE
0.3 for 300mm	34,357 N per cleat
0.6 for 600mm	68,715 N per cleat
0.9 for 900mm	103,073N per cleat
1.2 for 1200mm	137,431 N per cleat

This force per distance can then be compared to different cleat mechanical strengths to ascertain the appropriate cleat and spacing requirements for specification.

In this example, the Ellis recommendation was for Emperor cleats (51,034N@300mm) every 300mm.

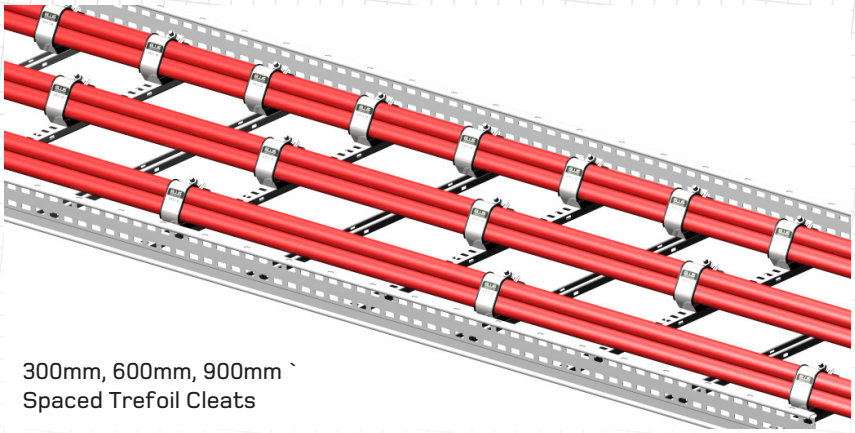

300mm, 600mm, 900mm `
Spaced Trefoil Cleats

EXAMPLE 2

RMS fault: 25.2kA

Installation: Ladder

Cables in trefoil with an outside diameter of 33mm

Firstly multiply the RMS by 2.5 (or other system specific factor) to give 63kA peak. Then:

$$F_t = \frac{0.17 \times 63^2}{0.033} = 20{,}446 \text{ N/m}$$

F_t x CLEAT SPACING	REQUIRED RESISTANCE TO ELECTROMECHANICAL FORCE
0.3 for 300mm	6,134 N per cleat
0.6 for 600mm	12,268 N per cleat
0.9 for 900mm	18,401 N per cleat
1.2 for 1200mm	24,535 N per cleat

As with example 1, force per distance can be compared to required resistance to electromechnical force and the appropriate cleat and spacing specified.

In this example, Alpha cleats (15,265N@600mm) spaced every 600mm are the best option.

NOTE:

Ellis provide an online cleat calculator to simplify selection: www.ellispatents.co.uk/cleat-calculator

MATTERS OF CORROSION

One of the most important issues to consider when specifying cable cleats is the risk of material corrosion – not just as a result of the installation environment, but also from other metals which the cleat is in contact with.

GALVANIC CORROSION

Galvanic corrosion occurs when dissimilar metals are placed in contact with each other in the presence of an electrolyte.

There are two factors that affect the rate of galvanic corrosion, the first is the distance between the two metals in the galvanic series.

Galvanic Series

The further apart the two metals are in the series, the greater the risk of galvanic corrosion – with the metal higher up the list (more anodic) being the one whose rate of corrosion is accelerated.

The second factor to consider is the relative surface areas of the different metals.

If the more anodic (higher up the list) metal has a smaller surface area than the metal it is in contact with, the difference in surface area causes the rate of corrosion of the anodic metal to increase.

Conversely, if the more anodic metal has a much larger surface area than the cathodic metal, it may be sufficient for the effects of galvanic corrosion to be discounted.

In terms of cleat selection, the surface area of the cleat is generally significantly smaller than the structure it is mounted on.

Therefore, if it is made from a metal that is more anodic than its support structure it will be susceptible to galvanic corrosion.

Conversely, if the cleat is more cathodic than its support structure, there is little risk of galvanic corrosion.

Using this criteria, if galvanised ladder is the support structure, and there are no other significant factors, it is safe to use stainless steel or aluminium cleats. However, if the support structure is stainless steel, separation should be provided if aluminium or galvanised cleats are used.

MATTERS OF CORROSION

Galvanic corrosion is not easily predictable and can be influenced by the type of electrolytes present such as salt water or fresh water containing impurities.

In general terms when guarding against galvanic corrosion, the safest course of action is to separate dissimilar metals with polymer separation washers.

This separation should be carried out between the cleat and its mounting surface and the cleat's mounting fixing.

All Ellis products constructed from dissimilar metal are designed in a way that completely avoids bimetallic contact. As a result of this you can be confident that cable cleats will have a service life measured in decades.

STAINLESS STEEL

In general, cable cleats are manufactured from austenitic stainless steel due to its non-magnetic and corrosion resistant properties – the former ensuring the cleat won't induce eddy currents or localised heating of the cable.

Austenitic stainless steel does become a little magnetic as a result of work hardening when processed. This magnetism can barely be detected with a magnet and so is not significant from an eddy current perspective.

There are many different types of stainless steel, but there are two principal variants when it comes to cable cleats.

304 austenitic stainless steel, often referred to as A2, is one of the most commonly used stainless steels. It has excellent corrosion resistant properties in most circumstances, although is susceptible in atmospheres where chlorides are present, making it unsuitable for use in coastal or marine environments.

316 austenitic stainless steel, often referred to as A4, contains Molybdenum, which provides resistance against chlorides. 316 is often referred to as marine grade stainless steel due to its suitability for use in coastal and offshore applications.

If unsure a simple chemical test can determine whether Molybdenum is present and so differentiate between 304 and 316.

304 and 316 stainless steel are available in low carbon variants, namely 304L and 316L. These variants are immune to sensitisation (grain boundary carbide precipitation).

Any cleat which is manufactured from stainless steel and includes welding in the manufacturing process should be made in a low carbon (L) variant.

ALWAYS REMEMBER:

All Ellis stainless steel cable cleats are produced from 316L austenitic stainless steel.

MATTERS OF CORROSION

COATINGS

The corrosion resistance properties of stainless steel are a result of chromium, which reacts with oxygen and forms a self-healing impervious layer of chromium oxide on the surface of the steel.

In most circumstances the chromium oxide layer is extremely durable and helps in resisting galvanic corrosion. However, in certain installation locations, such as railway tunnels, the oxide layer can be continuously penetrated. This occurs due to trains frequently applying their brakes, which releases mild steel dust into the atmosphere that then settles on the stainless steel. If moisture is present, then corrosion occurs at an exaggerated rate.

In such circumstances, if regular washing is not feasible, use of aluminium as an alternative to stainless steel products and/or coating processes are strongly recommended.

Ellis offers special coatings to suit specific environments – e.g. our London Underground Approved electrostatic plastic coatings.

FIXINGS

Closure fixings on cable cleats are fundamental to the loop strength of the cleat and its short-circuit withstand capability.

All Ellis 316L stainless steel cleats use 316 fixings, which are manufactured to a precise and specific tensile strength. Fixings are sourced directly from approved manufacturers and any fixing on any cleat is directly traceable back to the batch quality records at that manufacturer.

GALVANISED STEEL

Contracts often require a guarantee regarding the life expectancy of a cleat.

If the installation is designed correctly and all other corrosion issues have been considered this is a relatively simple exercise for stainless steel products.

With galvanized steel, life expectancy is determined by the thickness of the zinc coating.

The resistance of galvanizing to atmospheric corrosion depends on a protective film that forms on the surface of the zinc.

When the newly coated steel is withdrawn from the galvanizing bath, the zinc has a clean, bright, shiny surface. With time a corrosion process occurs which produces a dull grey patina as the surface reacts with oxygen, water and carbon dioxide in the atmosphere. This leads to the formation of a tough, stable, protective layer, which is tightly adherent to the zinc.

As the corrosion process is continuous, the thickness of the zinc layer reduces over time and it is the speed of this reduction that is used to accurately predict the life span of the cleat.

MATTERS OF CORROSION

CORROSION RATES FOR THE UK

Permission to use the information relating to galvanising was granted by the Galvanizers Association for galvanised steel.

If a galvanised steel cleat is specified for use in a zone 3 area then the corrosion rate is 1.5 microns (µm) per year.

If the contract for this specification states a required life expectancy of 40 years, then the initial galvanising thickness will need to be a minimum of 60 µm in order to meet the required longevity.

Zinc corrosion rates are represented by five categories indicated by the colour codes shown below.

Corrosion Category	1	2	3	4	5
Average Corrosion rate (µm/year)	0.5	1	1.5	2	2.5
Average life of 85 µm galvanized coating (years)	170	85	57	43	34

ALWAYS REMEMBER:

The corrosion rate for zinc is generally linear for a given environment.

The Zinc Millennium Map

Annual Average Atmospheric Corrosion of Zinc, UK and Republic of Ireland, 1998-2000

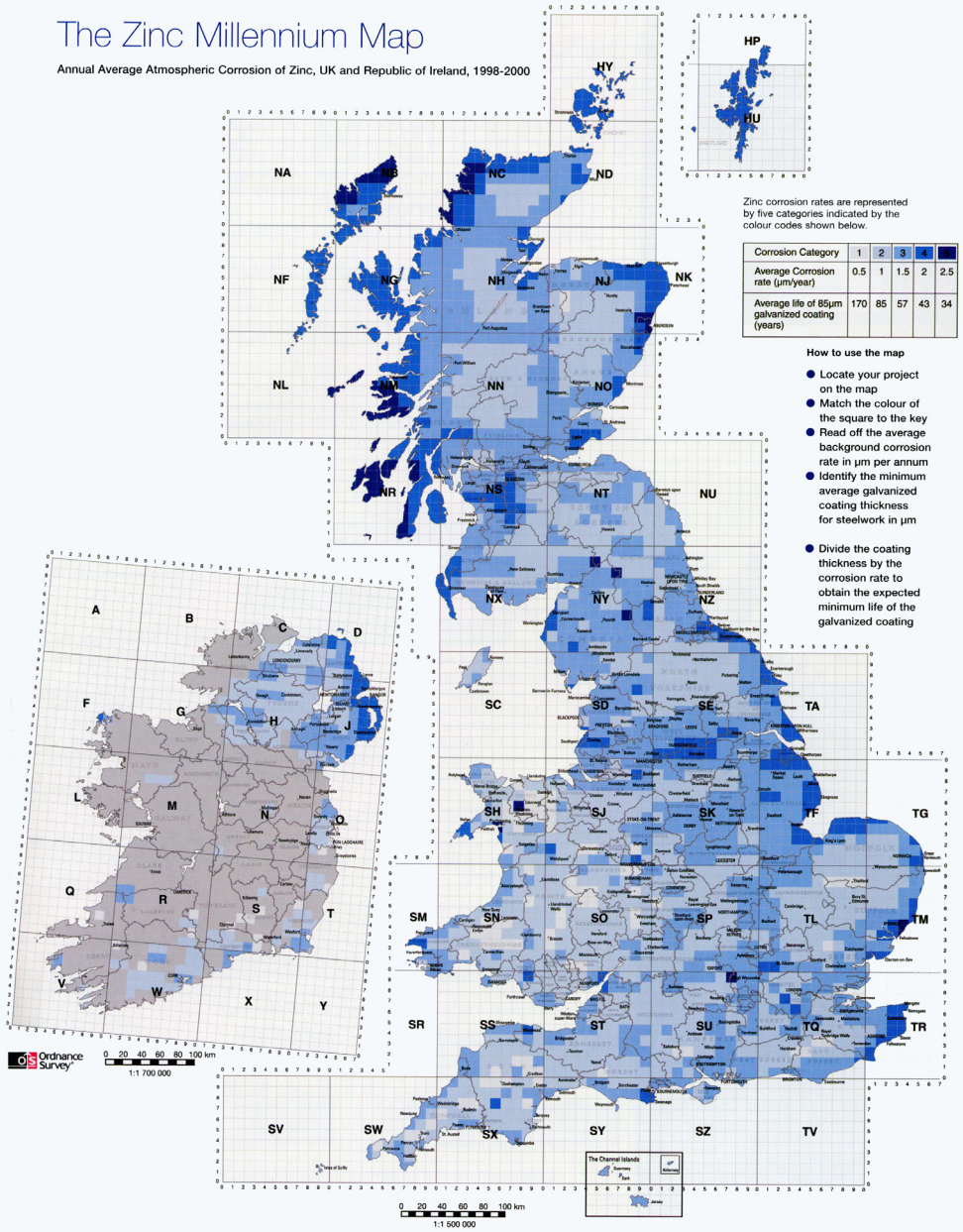

Zinc corrosion rates are represented by five categories indicated by the colour codes shown below.

Corrosion Category	1	2	3	4	5
Average Corrosion rate (µm/year)	0.5	1	1.5	2	2.5
Average life of 85µm galvanized coating (years)	170	85	57	43	34

How to use the map

- Locate your project on the map
- Match the colour of the square to the key
- Read off the average background corrosion rate in µm per annum
- Identify the minimum average galvanized coating thickness for steelwork in µm
- Divide the coating thickness by the corrosion rate to obtain the expected minimum life of the galvanized coating

Acknowledgements

- Agricultural Development Advisory Service (ADAS Consulting) for project management
- Mr Tom Shaw for consultancy services throughout the project and for application of the Thiessen method to the project data
- Britannia Zinc Limited for provision of laboratory facilities
- Mr John Curtin (consultant) and Mr Michael Taylor (Britannia Zinc Limited) for valuable project assistance
- All those who provided sample sites for the project

Cartographic reproduction by Lovell Johns Ltd, Copyright : Galvanizers Association 2001
Based upon the Ordnance Survey 1:1,500,000 map, with the permission of the controller of The Stationery Office.

ADAS Consulting and GA are grateful to Orange Plc for provision of survey sites in the UK and the Irish Electricity Supply Board for survey sites that allowed corrosion rates at key Irish locations to be included in the Zinc Millennium Map. Further studies are planned to extend survey coverage in the Republic of Ireland. For areas not yet covered, the rates indicated for comparable areas may be used as an indication of likely corrosion rates.

FREQUENTLY ASKED QUESTIONS

OPERATING TEMPERATURES

Our standard ranges of cleats are designed for use in ambient temperatures ranging from -50°C to +60°C and with cable conductor temperatures up to 90°C.

EDDY CURRENTS

Ferro-magnetic materials that completely surround single conductors in AC circuits are susceptible to heating from eddy currents.

Generally, eddy current generation at mains frequencies requires a complete electrical and ferro-magnetic circuit around each conductor. But in installations where all three phases are contained within the same cleat e.g. three cables in a trefoil cleat, the magnetic fields of the phases cancel each other out, which in turn negates the eddy currents and the heating effect.

Despite this, it is preferable to use cleats manufactured from non-magnetic materials such as aluminium, injection moulded polymers or stainless steel, which has only very slight magnetic properties.

ALWAYS REMEMBER:
When using single cable cleats manufactured from ferro-magnetic materials care should be taken to avoid forming a complete iron loop around the cable.

MULT-CORE CABLES

There is a commonly held belief within the electrical industry that multi-core cables will protect themselves in the event of a short-circuit, meaning their installation does not require fault rated cable cleats.

However, research shows that the forces between the conductors of a multi-core cable in the event of a fault are similar to those between three separate single core cables laid in a trefoil arrangement.

Therefore, when specifying multi-core cables it is advisable that cable manufacturer should be contacted to ascertain the ability of its specific cable to withstand these forces.

It is worth noting that whatever the withstand quoted, in the event of a significant fault an unrestrained multi-core cable will move.

Ellis Phoenix clamp undergoing independent fire rating testing

FIRE

There are currently no European or IEC standards for fire rated cable clamps, although there are requirements within other standards that can be followed to prevent unsuitable products being specified.

The international standard IEC 61914 requires non-metallic and composite cleats to have adequate resistance to flame propagation.

UL94, the standard for Safety of Flammability of Plastic Materials for Parts in Devices and Appliances, is a plastics flammability standard that classifies plastics according to how they burn in various orientations and thicknesses.

Adherence to its V-0 rating for polymers should be demanded by specifiers.

FOR INFORMATION:
UL94's V-0 rating means that burning stops within 10 seconds on a vertical specimen; drips of particles allowed as long as they are not inflamed.

The use of the description LSF (low smoke and fume) is common terminology with regard to polymers, but is misleading as it doesn't relate to any published standard and so can be interpreted in a wide variety of ways.

To ensure complete assurance of performance in a fire, Ellis plastic products have undergone testing in line with the London Underground 1-085 specification with regard to:

- Smoke emission
- Limited oxygen index
- Toxicity of fumes

The appropriate products are listed in the London Underground Approved Products register. Identification numbers are 360, 361,362, 363, 364, 365 and 1661.

A great deal of focus is placed on fire rated (FP) cables and their performance in fire, but very little attention is given to the cable fixings used to secure these cables. Given that FP cable is typically rated for operation in temperatures ranging from 850°C to 950°C then the use of plastic

cleats or clamps is clearly inappropriate.

Even aluminium only has a melting point of 660˚C, which means it would fail to support FP cables in a fire.

To counteract this shortcoming, Ellis manufactures the Phoenix range of clamps for use with FP cables. Independently tested by Exova Warrington fire and BRE, all products in the range are proven to perform to the same level as the FP cables ensuring continuous operation in the event of fire.

UV RESISTANCE

While wholly metal cleats are impervious to UV attack, composite and polymer cleats can be at risk.

Ellis composite cleats such as Emperor, Vulcan and Atlas all have polymer liners, but are designed to be impervious to UV attack because the polymer is shielded by either the cleat's body or the installed cables.

Polymer cleats that are likely to be exposed to UV should be supplied in materials containing carbon black or other UV stabilised material.

ALWAYS REMEMBER:
All cleats supplied by Ellis for applications involving UV are provided in UV resistant materials.

CABLE SYSTEM DESIGN

As a cable cleat manufacturer, we do not offer advice on the design principles and choices between different types of cable installation. We will however provide expert advice on the suitability of particular cleats within any type of installation.

FLEXIBLE AND RIGID CABLE INSTALLATIONS

consideration is the constant movement of the cable due to thermo-mechanical effect. To accommodate this two principal types of installation design exist:

Flexible systems where the cables are "snaked" either vertically or horizontally. The cable can expand and contract freely between fixing points.

Rigid systems where the cables are rigidly fixed. The longitudinal thermo-mechanical force is withstood by the combination of the stiffness of the cable, the cleat reaction force and the rigidity of the support structure.

Cable cleats are designed to withstand the forces exerted by the cable in the 'axial' direction, this is relevant to both flexible and rigid systems. It is also important when the cables are installed vertically.

RECOMMENDED READING:
CIGRE Technical Brochure TB194 & TB669

FLAT, TREFOIL AND QUADRAFOIL INSTALLATIONS

Cable arrangements for three phase installations utilising single conductor cables are typically flat spaced, flat touching or trefoil.

The Wiring Regulations (BS7671) provides current ratings and voltage drop values for all these arrangements. It also contains information on grouping factors and spacing between circuits to achieve thermal independence.

Additionally, IET Guidance Note No. 6 delivers valuable advice on installation arrangements where there are multiple cables per phase.

An additional method for installing single-core cables is to use quadrafoil cleats where the neutral is bundled with the three phase conductors. In this arrangement, there is

no advice in BS7671 but a report produced by ERA on behalf of Ellis delivered the following guidelines:

- Current ratings, given in BS7671, for cables in touching trefoil formation are appropriate for cables in quad bundles.
- Derating factors, given in BS7671, for cables in touching trefoil formation are appropriate for cables in quad bundles.
- Voltage drops for circuits in quad formation should be calculated using the values tabulated in BS7671 for cables in flat touching formation.
- When considering multiple cables per phase, the advice given in Guidance Note No.6 for trefoil groups is applicable to quad bundles.
- The induced voltage in the neutral conductor of a quad group is minimal and can be ignored.

HOW DO I PREVENT THREAD GALLING WHEN INSTALLING CLEATS?

Stainless steel fasteners have a propensity to "pick-up" when the two threaded surfaces slide against each other. If sufficient speed and pressure is applied to the sliding surfaces then they can weld themselves together – a phenomenon known as thread galling.

All stainless steel fixings will thread gall if there is sufficient friction.

To avoid thread galling, reduce the speed and downward pressure when closing fasteners and use lubrication where appropriate.

HOW TIGHT IS TOO TIGHT WHEN SECURING A CLEAT?

Cleats are generally fastened around the cable by a threaded bolt and nut, and the higher the torque when closing this fixing, the tighter the cleat's grip on the cable.

A tight grip can be advantageous when considering axial slippage, but care needs to be taken as over-tightening can lead to damage to both the outer jacket and the construction of the cable.

As a rule of thumb, cleat fixings should be tightened until the cleat is tight around the cable without any gaps between the liner of the cleat and the cable, and with no visible damage or bulging to the outer jacket.

Specific torque recommendations can be provided upon request.

TYPE APPROVALS

Ellis holds Type Approval for a wide range of its products. These include:

DNV AND ABS TYPE APPROVAL

Both DNV and ABS are rigorous approval systems, which cover all sizes of cable cleat within a particular range. The approval process assesses all of the evidence offered by the manufacturer and compares it to the requirements of the international standard IEC 61914. Once full compliance is proven Type Approval is offered.

Regular external audits are carried out to ensure ongoing compliance.

LONDON UNDERGROUND (LUL) APPROVED PRODUCT REGISTER

Similar to DNV and ABS in that compliance to the IEC standard has to be proven, LUL approval also requires products to undergo a series of material performance tests relating to toxicity, smoke emissions and the Limiting Oxygen Index.

These tests are carried out in accordance to the relevant standards and once compliance is achieved the product becomes "compliant with the requirements of London Underground Standard 1-085". The product range is then allocated with a unique Product Register Number and placed on to the LUL Intranet system used by specifiers and buyers working on LUL projects

UNDERWRITERS LABORATORIES (UL) LISTED

UL subjects products to a comprehensive set of tests to gauge compliance with its own Internal Technical Standards.

If only one size of cleat within a range has been tested then UL Listing applies only to that cleat at that size and not the entire range. It is the manufacturer's responsibility to clearly display in any technical brochures, websites or literature the specific part number that has been UL listed.

Regular external audits are carried out to ensure ongoing compliance.

ACHILLES FPAL

FPAL is a supplier management community that supports the European oil and gas industry and is used by major buying organisations in the sector.

Its Achilles proven supplier pre-qualification system enables buyers and specifiers to identify, pre-qualify and assess suppliers for tender opportunities, thus minimising risk within their supply chains.

BUSINESS MANAGEMENT

TRACEABILITY

Every cleat assembled by Ellis is given a serial number that can be used for identification and traceability.

From this top level reference number every item that goes into the manufacture of every single cleat can be traced back to source, including raw material and items such as nuts and bolts.

Ellis operates a full and comprehensive business management system, which covers:

bsi

ISO 9001
Quality Management Systems
CERTIFIED
FM12199

ISO 14001
Environmental Management
CERTIFIED
EMS 596540

ISO 45001
Occupational Health and Safety Management
CERTIFIED
OHS 699279

IEC 61914 – CABLE CLEATS FOR ELECTRICAL INSTALLATIONS

IEC 61914 specifies requirements and tests for cable cleats and intermediate restraints used for securing cable in electrical installations. Cable cleats provide resistance to electromechanical forces. Products achieve conformance to the standard after being subjected to a range of tests.

The tests are designed to simulate real world installation conditions and provide designers with data that can be used to aid with system design. Relevant sections of the standard and Ellis' testing regime are detailed below.

1. Cleat Type
2. Temperature for permanent application
3. UV Resistance
4. Corrosion Resistance
5. Impact Rating
6. Flame Propagation Test
7. Axial Load Rating
8. Lateral load rating test
9. Resistance to electromechanical force

1. CLEAT TYPE

The three cleat classifications are:

■ Metallic ■ Composite ■ Non-metallic

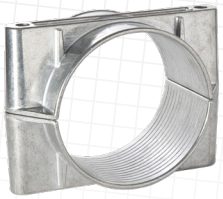

METALLIC CLEAT

COMPOSITE CLEAT

NON METALLIC CLEAT

Metallic cleats are all metal and fully polymeric (apart from the fixings), composite cleats contain a combination of metallic and polymeric parts and non-metallic cleats contain no metallic parts and are fully polymeric.

2. TEMPERATURE FOR PERMANENT APPLICATION

DEFINITION:

The ambient temperature range that a cleat is capable of operating within.

IEC 61914 provides set temperatures to specify against. These values are ambient and are not representative of the expected maximum cable conductor temperature.

MINIMUM TEMPERATURE °C
+5
-5
-15
-25
-40
-60

MAXIMUM TEMPERATURE °C
+40
+60
+85
+105
+120

3. UV RESISTANCE

Composite and non-metallic type cleats are subject to UV resistance testing. Samples are exposed to a minimum of 700 hours of 'Xenon-arc' UV light in accordance with ISO 48922:2006. Products are deemed to have passed if they show no signs of cracking or degradation to normal vision and pass the requirements of the impact test.

Cleats deemed as being UV resistant are certified only to the requirements of IEC 61914 and as such their classification may not extend to harsher criteria (e.g. desert installation). Ellis have UV testing capabilities in house and can test conditions which are more onerous than detailed in IEC 61914.

ELLIS' IN HOUSE UV WEATHERING TEST STATION

4. CORROSION RESISTANCE:

Metallic or composite type cleats are subject to corrosion resistance testing. Any metal components that are non-ferrous (e.g. aluminium) or are ferrous but contain more than 16% chromium (e.g. 316L stainless steel) need not be tested and are assumed to meet the classification for high resistance to corrosion. Any metallic components that do not meet this criteria are subject to a minimum of 192 hours of salt spray according to ISO9227 (for 'high corrosion classification'). After the exposure the cleats are visually checked and deemed to have passed if 'no red rust visible to normal or corrected vision.'

Similar to the UV test data the classification of 'high corrosion resistance' is limited to the criteria of the standard and therefore for applications in harsh environments contact Ellis for guidance.

IN ADDITION TO THE CORROSION TESTING TO IEC 61914 ELLIS CARRIES OUT EXTENDED TESTING ON ITS OUTDOOR WEATHERING STATION.

5. IMPACT RATING

A cleat's impact rating is established by dropping a set weight onto a product from a set height. The rating relevant to the weight and height characteristics are detailed below. For composite and non-metallic cleats this is conducted at the minimum declared temperature for the cleats. For metallic cleats the testing is done at room temperature. A cleat is deemed to have passed providing there is no damage that would affect the cleats load holding capability.

The impact test is reflective of the resistance to items dropping on it whilst on site, or it being dropped during install.

CLASSIFICATION	NOMINAL IMPACT ENERGY (J)	EQUIVALENT MASS (KG)	HEIGHT (MM)
Very light	0.5	0.25	200
Light	1.0	0.25	400
Medium	2.0	0.5	400
Heavy	5.0	1.7	300
Very Heavy	20.0	20.0	400

6. FLAME PROPAGATION TEST

This test applies to composite and non-metallic type cleats. A needle flame is applied to a product to establish its potential contribution to fire. A cleat is deemed to have passed if any drips of material that fall from the product do not ignite tissue paper placed below and if after 30 seconds of the flame being removed there is no flaming of the cleat. The testing follows the general principles of IEC 60695-11-5.

This test determines whether a cleat will propagate fire in the presence of a small external flame, a pass to the criteria of IEC 61914 does not make a cleat 'fire rated'. Ellis offers predominantly flame-retardant polymers, for lower cost non critical applications non FR rated materials are available.

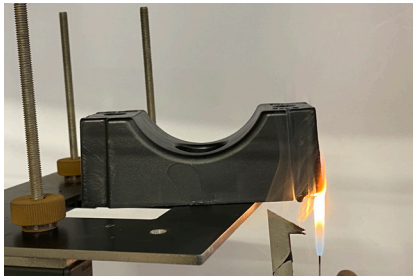

7. AXIAL LOAD RATING TEST

A cleats axial load rating is a measure of its grip on a cable. A manufacturer-declared load is applied to a mandrel, this load is held for 5 minutes and the cleat is deemed to have passed if the deformation of the mandrel relative to the cleat is less than 5mm. For composite and non-metallic cleats, the test is carried out at the maximum declared temperature. For metallic cleats the test is carried out at room temperature.

A cleats axial rating is provided to specify cleats for vertical installations where the cleat is required to hold the weight of the cable within its grip. It may also be applicable to installations where resistance to thermomechanical axial thrust is required.

THE AXIAL LOAD RATING OF A CLEAT ISUSED TO SPECIFY THE SPACING OF CLEATS TO HOLD THE WEIGHT OF THE CABLE IN VERTICAL INSTALLS

8. LATERAL LOAD RATING TEST

The lateral load test measures the cleat's capability to withstand continuous loading over long periods of time. A self-declared load is applied and held for an hour and a cleat is deemed to have passed if the deformation of the product is less than 50% of the minimum mandrel diameter the cleat can accept. The test is undertaken in two different cleat mounting scenarios, detailed as horizontal and vertical in Ellis' literature.

For composite and non-metallic cleats, the test is carried out at the cleat's maximum declared temperature, for metallic type cleats, testing is at room temperature.

The test can be considered representative of the cleat's ability to hold cable weight, for example if it is installed upside down or on its side. It can also provide detail of

the cleat's resistance to any lateral thermomechanical loads. The lateral load test data is not an indication of a

cleats short circuit performance.

THE LATERAL LOAD RATING OF A CLEAT CAN BE USED TO SPECIFY CLEATS BASED ON CONTINUOUS LOADING, SUCH AS MOUNTING CLEATS ON A SIDE.

9. RESISTANCE TO ELECTROMECHANICAL FORCE

Perhaps the most important function of a cable cleat is to withstand the electromechanical forces generated during a short circuit. IEC 61914 short circuit testing specifies a three phase fault with one cable per phase. One end of the cables is connected to a three phase supply and the other end to a short-circuit busbar connecting all three phases. Some key requirements of the testing are as follows:

- The short circuit peak current is carried out to a manufacturer declared peak current and lasts no less than 0.1s.
- The test cable must be unarmoured single core 600 V /100 V stranded copper conductor cable with a 35(±5mm or 50 (±5)mm outside diameter.
- Testing is carried out at the prevailing ambient temperature of the laboratory.
- A minimum of 5 test cleats are to be used for fully cleated tests and at least 4 cleats and 3 intermediate straps must be used for cleat-strap installs, as displayed above.
- The cable formation tested must either be trefoil or flat formation, see below:

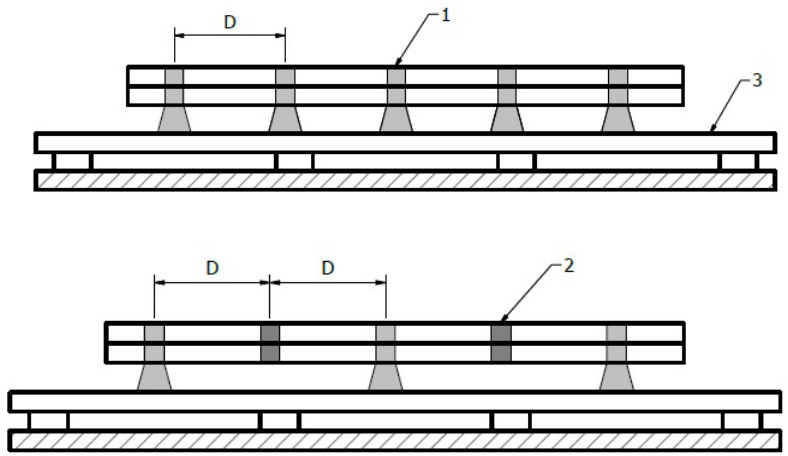

Key	Description
1	Cable Cleats
2	Intermediate Restraints
3	Mounting Surface
D	Lineal Spacing

EXTRACT FROM IEC INTERMEDIATE RESTRAINT TEST LAYOUT.

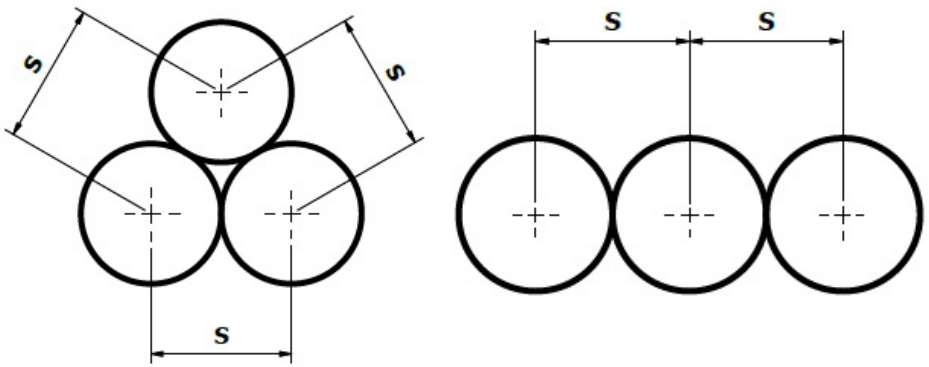

After one short circuit a cleat is deemed to have passed if:

- There is no failure that will affect the cleat or intermediate straps from holding the cables in place.
- The cleats and intermediate straps shall be intact with no missing parts including all devices used to secure cleats to the mounting surface.
- There shall be no cuts or damage visible to normal or corrected vision to the outer sheath of each cable caused by the cleats or intermediate straps.

A manufacturer can decide to test a second short circuit. The pass criteria for a cleat withstanding two short circuits is as follows:

- The pass criteria for one short circuit applies.
- The test rig must pass a 2.8kV d.c or 1.0kV a.c 60 second voltage withstand test administered between the cable cores and the mounting frame. With the cable jackets and mounting frame being pre-wetted to facilitate a current leakage path.

Ellis has over 20 years' experience of short circuit testing. Our experience in the field precedes the inception of National and International Cable Cleat standards. The company has carried out over 1,000 short circuit tests in numerous test labs around the world to the requirements of IEC 61914 as well as specialised testing to customer requirements.

TYPICAL TESTING TO IEC 61914 AND BESPOKE TESTING OF A HV TEST RIG TO A CUSTOMER'S SPECIFICATION.

REFERENCES

International Electrotechnical Commission (IEC) 61914:2009: Cable cleats for electrical installations (2009)

International Electrotechnical Commission (IEC) 61914:2015: Cable cleats for electrical installations (2015)

CIGRE Technical Brochure – Ref. No. 194: Construction, laying and installation techniques for extruded and self-contained fluid filled cable systems (2001)

Nexans Power Accessories (UK) Ltd / Goulsbra, Dr G: Medium Voltage Cable Accessories (2012)

Heinhold, L. Wiley: Power Cables and Their Applications: Pt. 1 (Power Cables & Their Applications) (1990)

International Electrotechnical Commission (IEC): Cable Systems, Tutorial and Design Guide, EPRI 1022314, Final Report (2010)

International Electrotechnical Commission (IEC) 61439-1 ed 2.0: 2011: Low-voltage switchgear and control gear assemblies (2011)

Electric Power Research Institute: Normalized span method for thermo-mechanical design of duct-manhole and pipe-manhole cable systems (2010)

International Electrotechnical Commission (IEC) 61914:2021 Cable Cleats for electrical installations (2021)

IET Wiring Regulations BS 7671:2008(2011)

London Underground Standard
Fire safety performance of materials
Number: 1-085
Issue no: A1
Issue date: March 2008

TECHNICAL SPECIFIERS GUIDE & CHECKLIST FOR CABLE CLEATS

SUMMARY SPECIFICATION:

Every conductor or cable shall have adequate strength and be installed to withstand the electromagnetic forces that may be caused by any current, including fault current (IET Wiring Regulations, 18th Edition, BS 7671:2018). Cable cleats shall be used to secure cabling to the chosen containment system, as well as for direct securing to a structure if no containment is necessary.

CLEATS SHALL BE SELECTED BASED ON:

- Calculated level of short-circuit fault current.
- The type of cable and cable arrangement.
- The space available for installation and the structure/material the cleat is being secured to.
- Environment in which they are to be used.
- Spacing of Cleats:
  - Cleats must be spaced to provide a continuous strength of resistance to the electromechanical forces generated during fault conditions.
  - The spacing required can be derived from a combination of the force calculation and the given certified strength of the cleat.
  - Manufacturers will generally provide a spacing based on a level of fault current (e.g., 300mm spacing at 165kA).

MINIMUM PRODUCT REQUIREMENTS

Material: The cable cleat shall be manufactured from high-quality, 316L stainless steel (or equivalent) to ensure maximum strength, durability, and corrosion resistance in harsh environments.

Design: The cable cleat shall be designed to provide optimal cable support and retention for use in vertical, horizontal, and inclined cable runs. It shall withstand the forces generated by short-circuit conditions, preventing cable escape or damage.

Size and Capacity: The cable cleat shall be available in a variety of sizes to accommodate cables of various diameters.

Certification: The cable cleat shall be designed and tested to comply with the international standard IEC 61914:2021. Additionally, it shall undergo independent short-circuit testing by a recognised third-party facility.

Installation: The cable cleat shall be easy to install, requiring no special tools or equipment. It shall be supplied with all necessary closure and fixing hardware (including nuts, bolts, and washers) for use on all types of cable tray, ladder, and conduit systems.

Warranty: The cable cleat shall be warranted against defects in material and workmanship for a minimum period of 12 months from the date of purchase. The warranty shall cover repair or replacement of the cleat, at the manufacturer's discretion, excluding damage caused by misuse, negligence, or unauthorised modifications. All cleats must have a clearly marked, unique serial number for material traceability.

	REQUIRED	
MANUFACTURER ACCREDITATIONS	**YES**	**NO**
ISO9001: Quality Management System		
ISO 14001: Enviromental Management System		
ISO 45001: Occupational Health and Safety Management System		
ABS		
JOSCAR		
Achillies UVDB Silver Plus		
PRODUCT APPROVALS	**YES**	**NO**
CE		
UKCA		
DNV		
ABS		
UL		
PRODUCT TEST REPORTS (Available upon request)		
UV resistance (IEC 61914: 6.5.1.2)		
Impact test (IEC 61914: 6.3.5)		
Lateral Load Horizontal (IEC 61914: 6.4.2, 9.3)		
Lateral Vertical (IEC 61914: 6.4.2, 9.3)		
Flame Propogation Test (IEC 61914: 10.0, 10.1)		
Label rub test (IEC 61914: 72)		
Independent third-party short circuit test certificate must be submitted (IEC 61914: 6.4, 6.4.5, 9.5)		
PRODUCT DOCUMENTATION (Available upon request)		
Technical drawings of the cable cleats		
Short circuit mechanical force calculations		
Data sheets for the recommended cable cleats and/ or intermediate restraints		
Technical Construction file detailing CE compliance		
Installation guides for the recommended cable cleats and or intermediate restraints		
Manufacturing Quality Plan		

Notes

ELLIS

Holding Power