| C6021 | ALL DIMENSIONS IN MM UNLESS OTHERWISE STATED | THIS DESIGN IS THE PROPERTY OF W.V. LTD. AND MAY NOT BE COPIED IN ANY FORM WITHOUT WRITTEN PRIOR CONSENT |
|---|---|---|

C6021

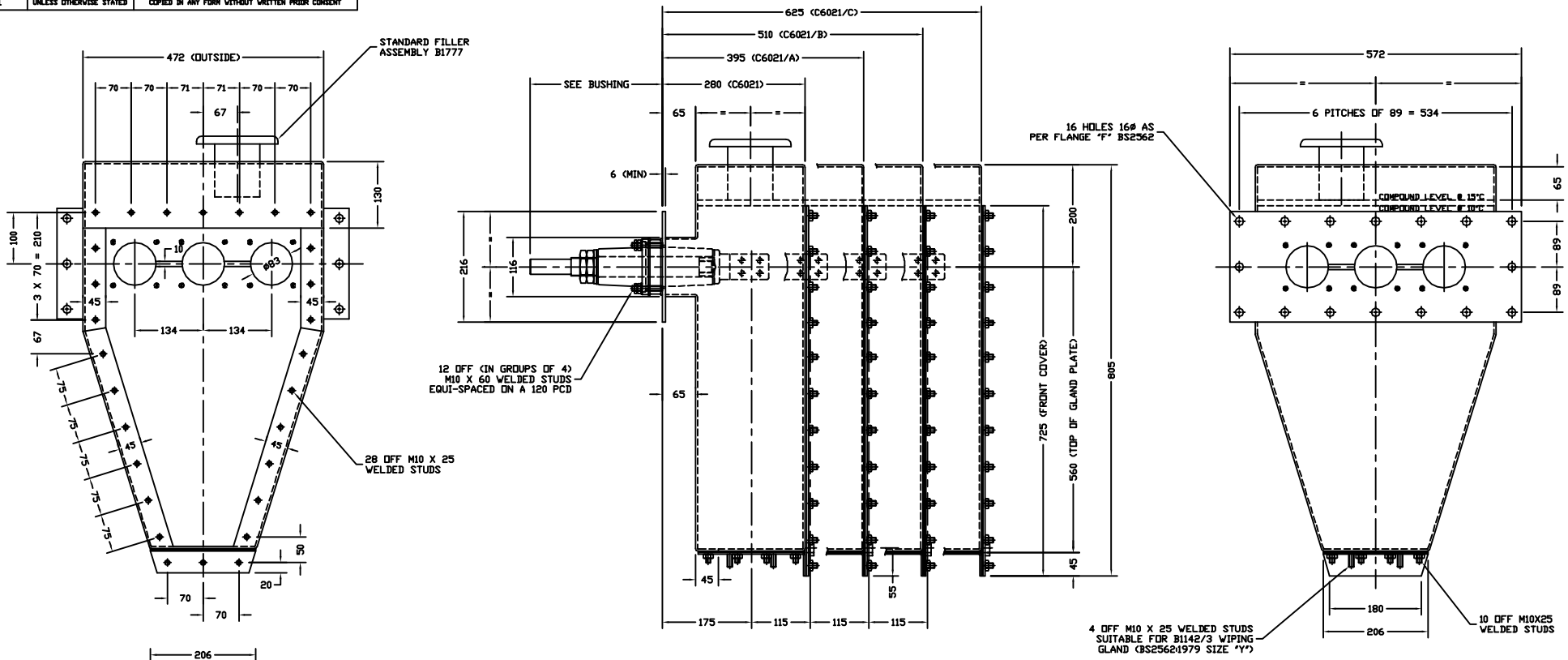


THIS RANGE OF CABLE BOXES IS SUITABLE FOR BUSHING ASSEMBLIES B9723 (UP TO 1600A) & B1785 (UP TO 2500A)

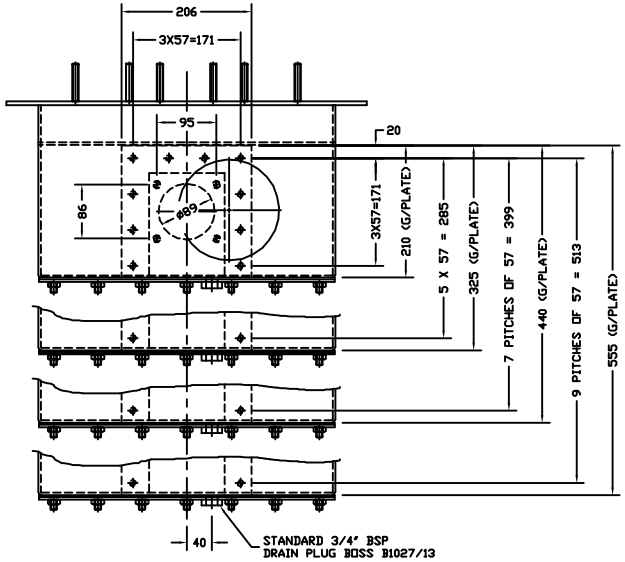


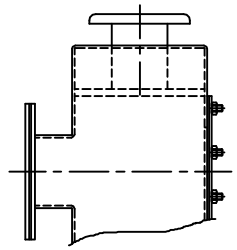

CABLE BOX C6020 - OPEN BACK BOX WITH SEPERATE BUSHING PLATE (CURRENT ON APPLICATION)

VIEW ON MOUNTING FLANGE OPEN BACKED CABLE BOX

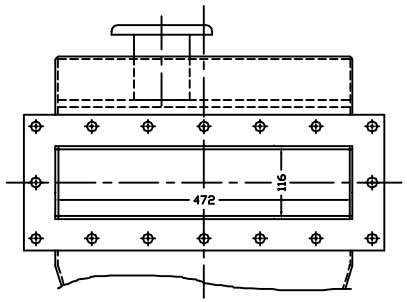


CABLE BOX C6021 - COMPLYING WITH SHELL 21 (SEE BS2562 TABLE 4)

TESTING-
PRESSURE TEST TO BS2562 SECTION 3 SEE PARAGRAPHS 8.5 & 9.2

FILLING VOLUME-
52,73,94,115 LITRES (TO MAXIMUM FILLING LEVEL)

CABLE BOX WEIGHT (EXCLUDING FITTINGS) :- 43,52,61&70kg (APPROX)

MATERIALS-
CABLE BOX SHELL = 4mm(MIN) MILD STEEL PLATE
FRONT COVER = 4mm(MIN) MILD STEEL PLATE
GLAND PLATE = 3mm(MIN) NON-MAGNETIC STAINLESS STEEL
MOUNTING FLANGE = 6mm(MIN) MILD STEEL PLATE

FINISHING- SEE WORKS ORDER

ORDERING INFORMATION
WHEN ORDERING THIS CABLE BOX PLEASE SPECIFY EITHER THE CABLE BOX BUSHING IT IS TO BE USED WITH OR THE CURRENT RATING AND NUMBER OF TAKE-OFFS REQUIRED
IF AN OPEN BACKED BOX IS REQUIRED PLEASE ADD /O ONTO DRAWING NUMBER e.g. C6021/B/O

THORNE & DERRICK INTERNATIONAL
Thorne & Derrick
+44 (0) 191 410 4292
www.powerandcables.com

| TOLERANCES UNLESS OTHERWISE STATED | |
|---|---|
| UN-MACHINED CASTINGS | ± 2 |
| UN-MACHINED STAMPINGS | ± 1 |
| CUT-OFF LENGTHS | ± 1 |
| MACHINED DIMENSIONS | ± 0 |
| FABRICATION DIMENSIONS | ± 3 |

WEBSTER-VILKINSON LTD. PARK AVENUE, WADLEY ILFORD SHEFFIELD ENGLAND

CABLE BOX ASSEMBLY FOR USE UP TO 12kV 2500 AMPS

REV. | DATE 18/09/81 | DRAWN JRG | APPROVED DSF | SCALE 1:4

DRG NO. C6021
CODE NO. N/A